REVISIONS			
REV.	DESCRIPTION	DATE	APPROVED
B	SEE DCN: 6062	01/18/08	

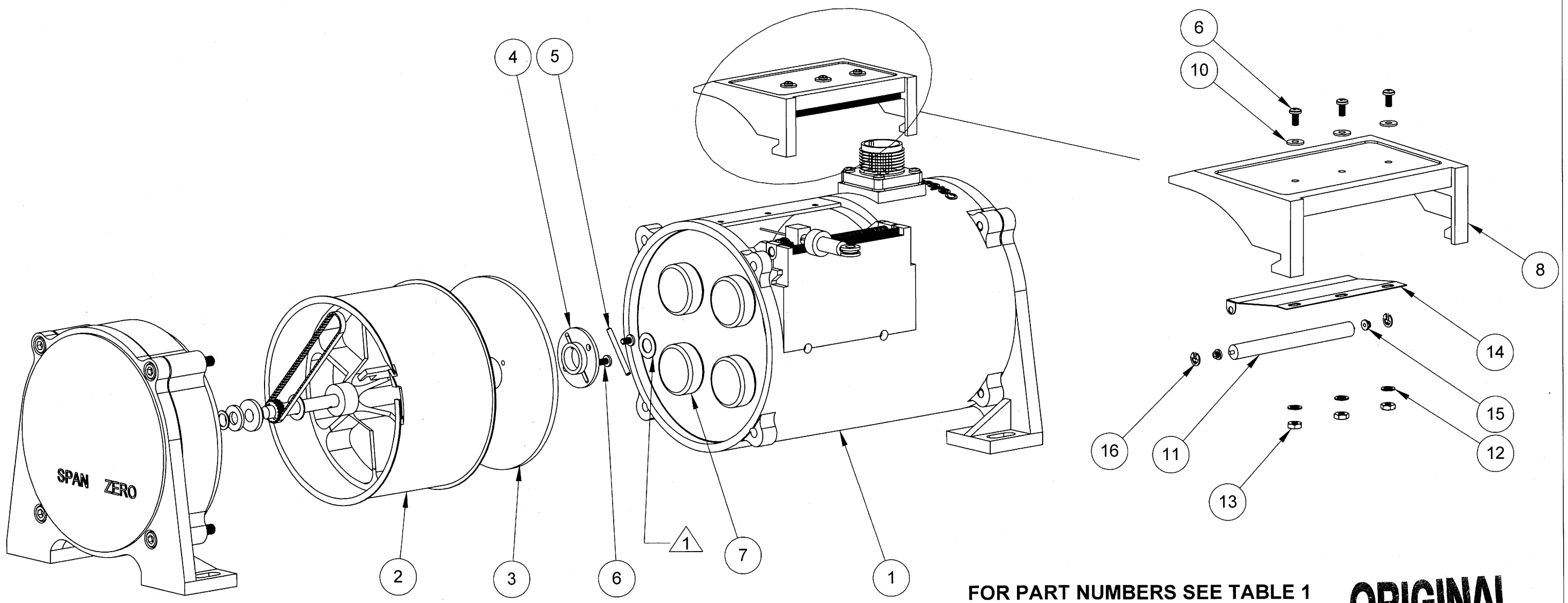

FOR PART NUMBERS SEE TABLE 1

ORIGINAL

2. ASSEMBLE USING PS-119 FOR DETAILS NOT SHOWN ON THIS DRAWING.

1. INSTALL ONE WASHER P/N 900330A-6005 BETWEEN SPOOL AND HOUSING. AFTER FINAL ASSEMBLY, TEST VELOCITY BY EXTENDING THE CABLE AND RELEASING IT. USE A STOP WATCH TO RECORD THE TIME IT TOOK TO FULLY RETRACT. TO CALCULATE VELOCITY, TAKE THE RANGE OF THE TRANSDUCER AND DIVIDE IT BY THE TIME IT TOOK FOR THE CABLE TO RETRACT.
   a. IF CABLE RETRACTION IS TOO FAST (OVER 55 INCHES PER SECOND), REPLACE .020 THICK WASHER WITH P/N 9000400-0171 (.010 THICK) AND RETRY.
   b. IF CABLE RETRACTION IS TOO SLOW (UNDER 40 INCHES PER SECOND), ADD WASHER P/N 9000400-0185 (.005 THICK) AND RETRY.

NOTES: UNLESS OTHERWISE SPECIFIED

INFORMATION AND DATA SET FORTH HEREIN ARE DISCLOSED IN CONFIDENCE AND ARE PROPRIETARY TO AND THE PROPERTY OF CELESCO TRANSDUCER PRODUCTS INC. AND SHALL NOT BE USED, DUPLICATED, DISCLOSED OR TRANSFERRED, IN WHOLE OR IN PART, FOR ANY PURPOSE, WITHOUT THE EXPRESS PRIOR WRITTEN CONSENT OF CELESCO TRANSDUCER PRODUCTS INC.

THIRD ANGLE PROJECTION

celesco Transducer Products Inc.
20630 Plummer St
Chatsworth, CA. 91311
Tel:(818)701-2750 Fax:(818)701-2799
www.celesco.com

APPROVALS		DATE
DRAWN	M.KRATOFIL	12/12/2006
CHKD	JJL	1/28/08
DO NOT SCALE DRAWING		

TITLE

VLS9000 ASSEMBLY DRAWING RANGES 75 TO 550 INCHES

SIZE	CODE IDENT. NO	DWG. NO.	REV
B	52158	PS-120	B
SCALE: 1:2		SHEET 1 OF 5	